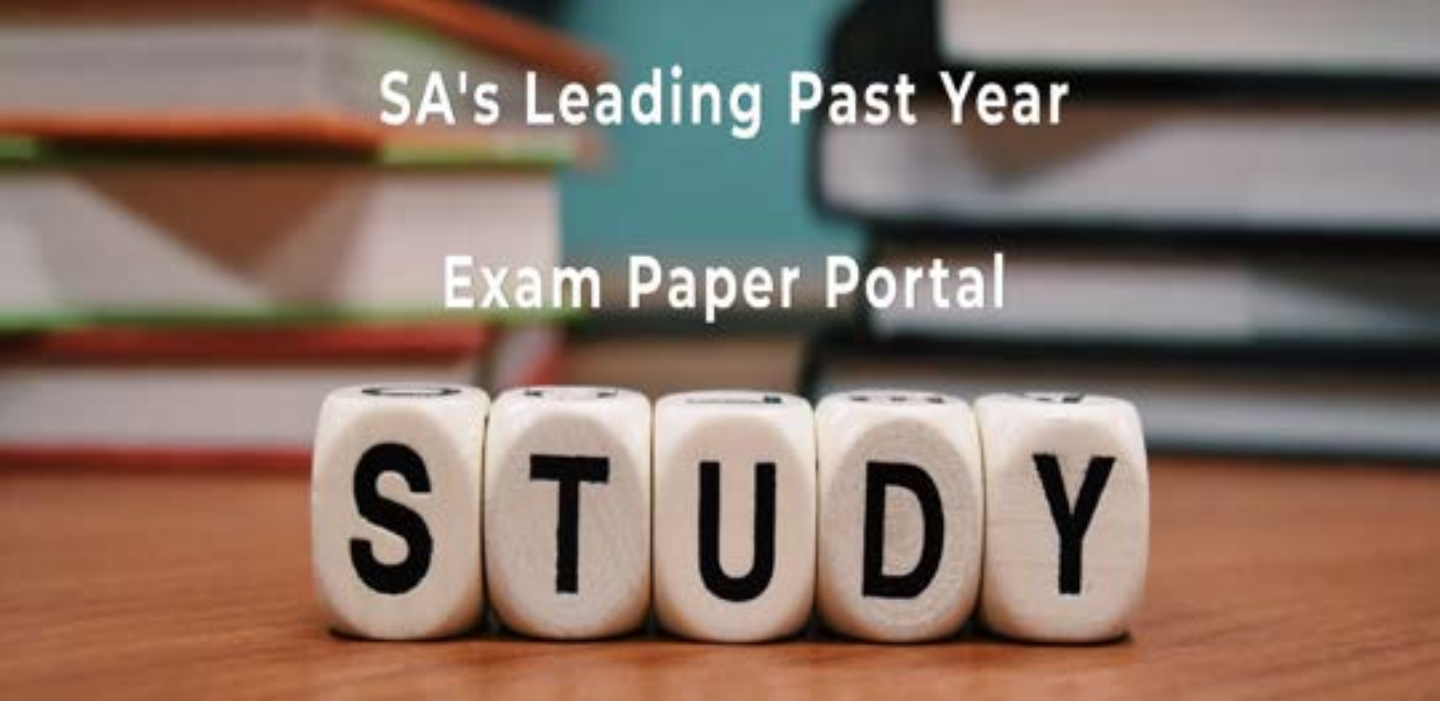

You have Downloaded, yet Another Great Resource to assist you with your Studies ☺

Thank You for Supporting SA Exam Papers

Your Leading Past Year Exam Paper Resource Portal

Visit us @ www.saexampapers.co.za

SA EXAM PAPERS

STAPLE

basic education

Department:
Basic Education
REPUBLIC OF SOUTH AFRICA

NATIONAL SENIOR CERTIFICATE

GRADE 12

ENGINEERING GRAPHICS AND DESIGN P2

FEBRUARY/MARCH 2018

MARKS: 200

TIME: 3 hours

This question paper consists of 6 pages.

Barcode label

INSTRUCTIONS AND INFORMATION

1. This question paper consists of FOUR questions.
2. Answer ALL the questions.
3. ALL drawings are in third-angle orthographic projection, unless otherwise stated.
4. ALL drawings must be prepared using pencil and instruments, unless otherwise stated.
5. ALL answers must be drawn accurately and neatly.
6. ALL the questions must be answered on the QUESTION PAPER, as instructed.
7. ALL the pages, irrespective of whether the question was attempted or not, must be re-stapled in numerical sequence in the TOP LEFT-HAND CORNER ONLY.
8. Proper planning is essential in order to complete all the questions.
9. Print your examination number in the block provided on every page.
10. Any details or dimensions not given must be assumed in good proportion.

FOR OFFICIAL USE ONLY															
QUESTION	MARKS OBTAINED			½	SIGN	MODERATED			½	SIGN	RE-MARKING			½	SIGN
1															
2															
3															
4															
TOTAL															
	2	0	0			2	0	0			2	0	0		

FINAL CONVERTED MARK	CHECKED BY
100	

COMPLETE THE FOLLOWING:
CENTRE NUMBER
CENTRE NUMBER
EXAMINATION NUMBER
EXAMINATION NUMBER

Copyright reserved

STAPLE

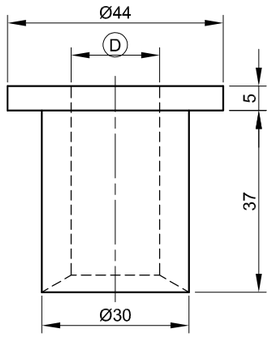

ENLARGED DETAIL OF BUSH

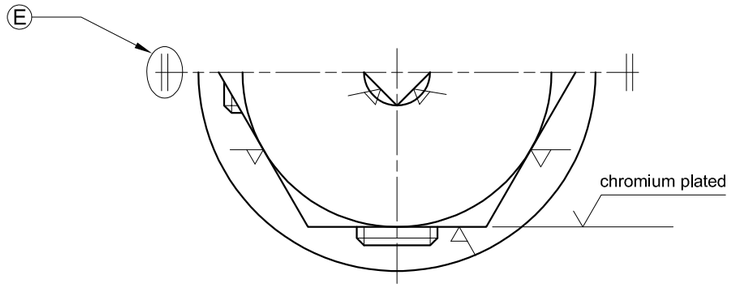

VIEW 2

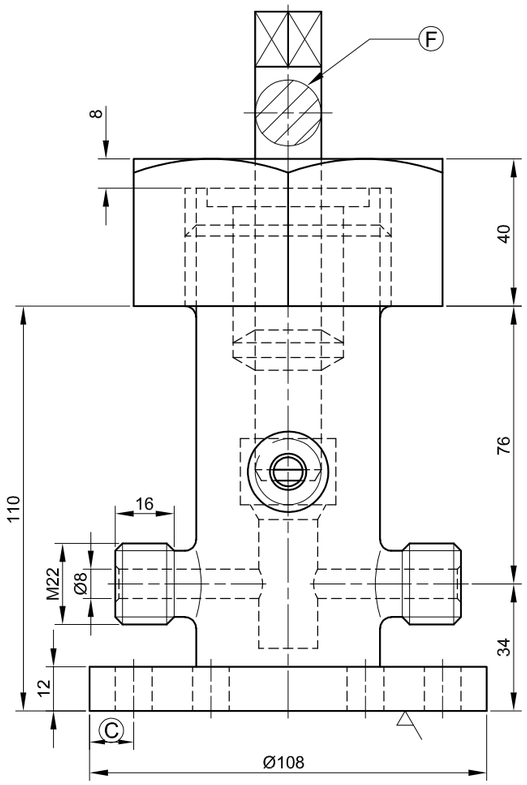

VIEW 3

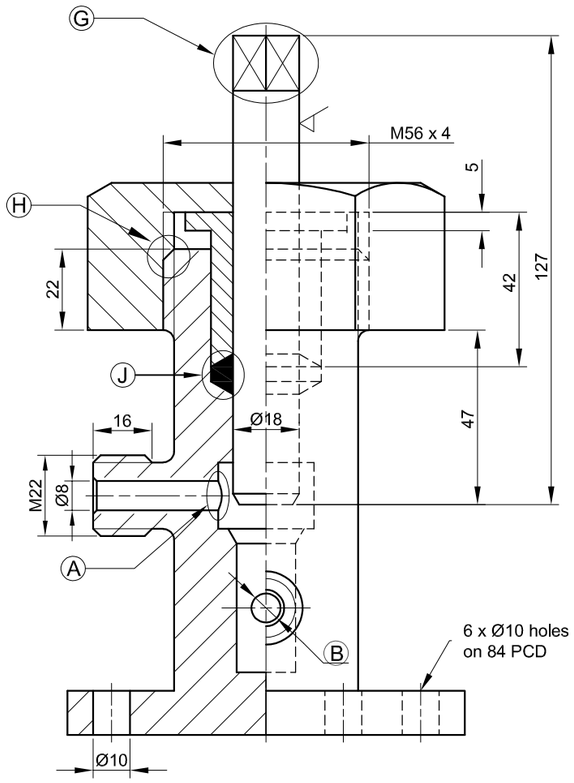

VIEW 1

QUESTION 1: ANALYTICAL (MECHANICAL)

Given:
Three views of a two-way valve assembly and a detailed enlargement of the bush, a title block, a parts list and a table of questions.

Instructions:
Complete the table below by answering the questions which all refer to the accompanying drawings and title block, neatly. **[28]**

	QUESTIONS	ANSWERS			
1	On what date was the drawing checked?		1		
2	What material is used to manufacture the gland?		1		
3	What is the manufacturer's web address?		1		
4	How many sets of drawings are there for the two-way valve assembly?		1		
5	How many Ø10 holes need to be drilled in the BASE?		1		
6	Give the complete title of view 1.		1		
7	Name the encircled drawing feature at A.		1		
8	Determine the dimensions at	B: C: D:	3		
9	Are views 1, 2 and 3 drawn to the indicated scale?		1		
10	Name the encircled feature at E.		1		
11	What is the purpose of the revolved section at F?		2		
12	What does the convention at G indicate?		1		
13	How deep is the thread at H?		1		
14	Why is the component at J filled in solid?		1		
15	Determine the total height of the assembly.		1		
16	What does the abbreviation PCD stand for?		1		
17	How many surfaces of the two-way valve assembly must be machined?		1		
18	With reference to the tolerance, determine the minimum dimension of the shaft.		1		
19	Determine the across flat (AF) distance of the M56 nut.		2		
20	What surface treatment must be applied to the M56 nut after milling?		1		
21	In the space below (ANSWER 21), draw, in neat freehand, the symbol for the projection system used.		4		
		TOTAL	**28**		

ANSWER 21: Projection symbol

PARTS LIST

	PART	QUANTITY	MATERIAL
1	BASE	1	BRASS
2	BUSH	1	BRASS
3	GLAND	1	NYLON
4	M56 NUT	1	BRASS
5	SHAFT	1	EN 19

DATE	CHANGED BY	REVISION DESCRIPTION	№
13/11/2016	PEDRO	INSERT GLAND	1

SCALE 1 : 2 — HEAT TREATMENT: NONE

FILE NAME: VA103/2016 — DRAWING SET NO. 3 OF 4

ALL VALVE MANUFACTURING — MAIN STREET GEORGE 6520 www.v4a.co.za

TITLE

TWO-WAY VALVE

UNLESS OTHERWISE SPECIFIED, TOLERANCES ON DIMENSIONS ARE ± 0,15. — MILLING

ALL DIMENSIONS ARE IN MILLIMETRES. — DRAWN: CARL DATE: 11/11/2016

ALL UNSPECIFIED RADII ARE R4. — CHECKED: SUE DATE: 15/11/2016

DRAWING PROGRAM: AUTOCAD 2016 — APPROVED: TINI DATE: 16/01/2017

EXAMINATION NUMBER

EXAMINATION NUMBER 2

Copyright reserved

STAPLE

A

QUESTION 2: LOCI

NOTE: Answer QUESTIONS 2.1 and 2.2.

2.1 MECHANISM

Given:
- A schematic drawing of a mechanism consisting of crank AB, connecting rod BC, connecting rod CD and crank DE
- The position of centre point A on the drawing sheet

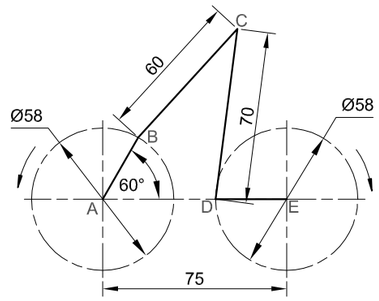

Specifications:
- The positions of A and E are fixed
- Connecting rod BC is pin-joined to crank AB at B and connecting rod CD is pin-joined to connecting rod BC at C
- Connecting rod CD is pin-joined to crank DE at D

Motion:
As crank AB rotates in an anti-clockwise direction, crank DE rotates in a clockwise direction at the same velocity.

Instructions:
- Draw, to scale 1 : 1, the given schematic drawing of the mechanism
- Trace the locus generated by point C for ONE complete rotation of the two cranks.

Show ALL construction. **[16]**

ASSESSMENT CRITERIA 2.1					
1	GIVEN	4			
2	CONSTRUCTION	4			
3	POINTS	6			
4	CURVE QUALITY	2			
	SUBTOTAL	**16**			

2.2 HELIX

Given:
- The incomplete front view of the shaft and the external profiles of a chute
- An auxiliary view of the chute
- The position of centre point O on the drawing sheet

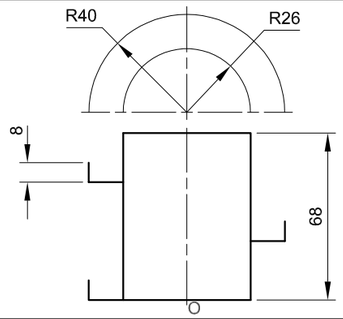

Specifications:
- Starting position : Bottom left
- Pitch : 48 mm
- Turns : ONE AND A QUARTER
- Direction : Right-handed

Instructions:
Draw, to scale 1 : 1, the complete front view of the chute.

- Show ALL construction.
- NO hidden detail is required. **[25]**

ASSESSMENT CRITERIA 2.2					
1	GIVEN + CL	1			
2	CONSTRUCTION	8			
3	OUTSIDE HELIX	$9\frac{1}{2}$			
4	INSIDE HELIX + SHAFT	$3\frac{1}{2}$			
5	CURVE QUALITY	3			
	SUBTOTAL 2.2	**25**			
	SUBTOTAL 2.1	**16**			
PENALTIES (-)					
	TOTAL	**41**			

EXAMINATION NUMBER

EXAMINATION NUMBER

O

STAPLE

QUESTION 3: ISOMETRIC DRAWING

Given:
- The front view, top view and left view of a guide
- The position of point B on the drawing sheet

Instructions:
Using scale 1 : 1, convert the orthographic views of the guide into an isometric drawing.

- Make B the starting point of the drawing.
- Show ALL construction.
- NO hidden detail is required. **[37]**

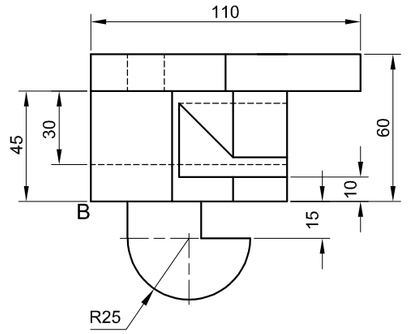

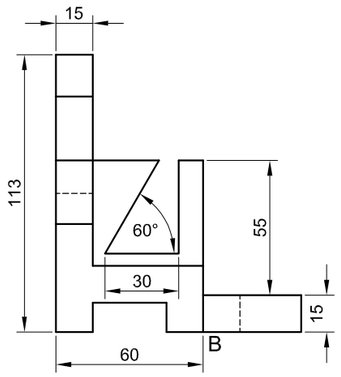

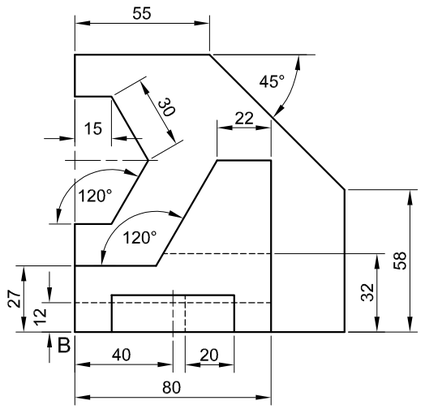

ASSESSMENT CRITERIA					
1	PLACEMENT + AUX VIEW	$2\frac{1}{2}$			
2	BASE + FRONT	$9\frac{1}{2}$			
3	UPRIGHT + MIDDLE	$19\frac{1}{2}$			
4	CIRCLE + CIRCLE CONSTRUCTION + CL	$5\frac{1}{2}$			
PENALTIES (-)					
	TOTAL	**37**			

EXAMINATION NUMBER

EXAMINATION NUMBER 4

Copyright reserved

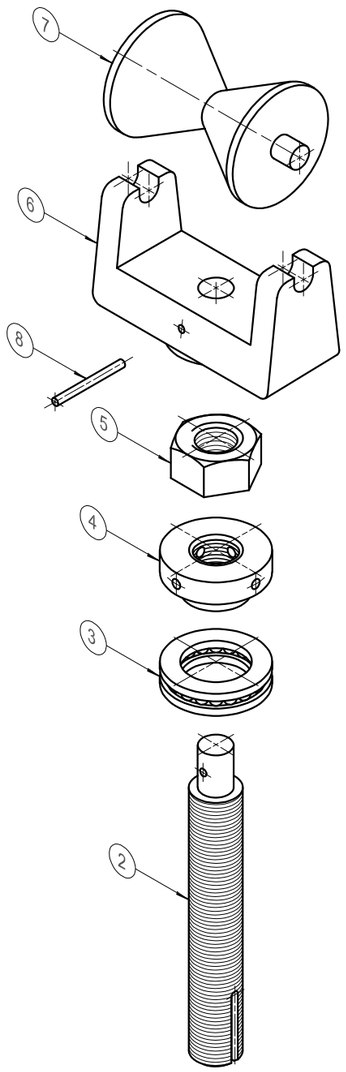

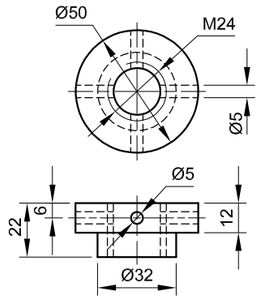

ADJUSTING COLLAR [4]

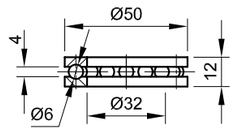

BEARING [3]

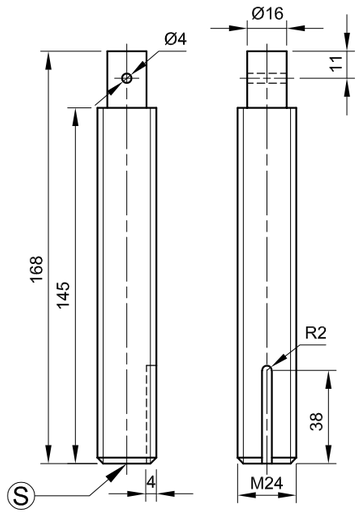

SHAFT [2]

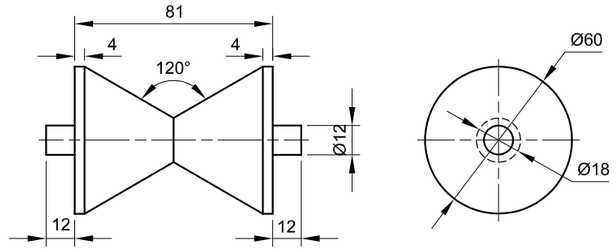

PULLEY [7]

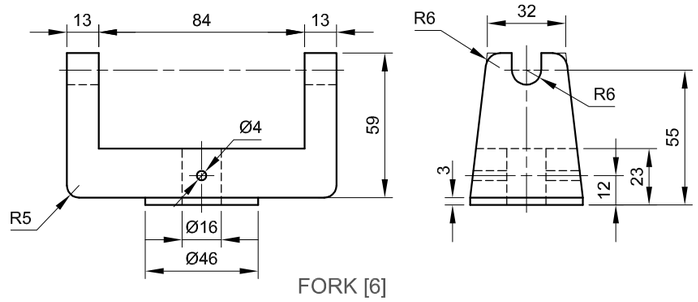

FORK [6]

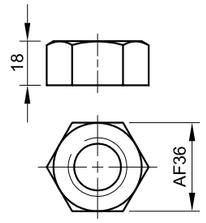

M24 NUT [5]

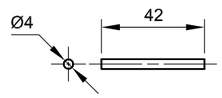

PIN [8]

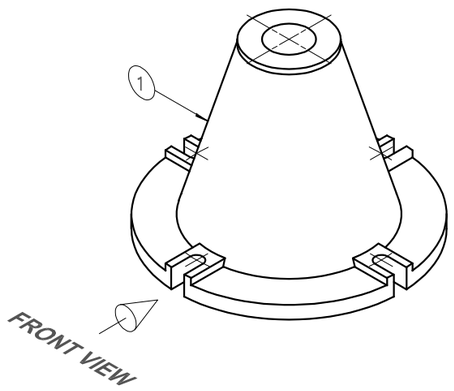

EXPLODED ISOMETRIC DRAWING

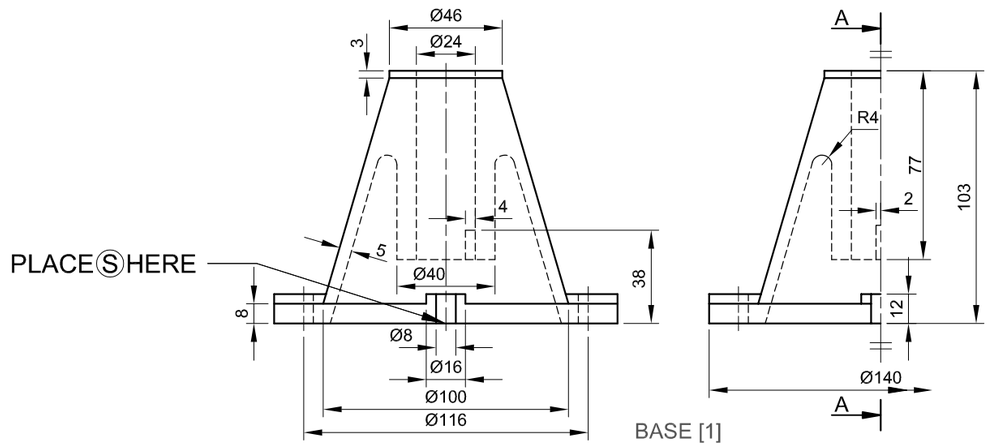

BASE [1]

QUESTION 4: MECHANICAL ASSEMBLY

Given:

- The exploded isometric drawing of the parts of a pulley jack assembly, showing the position of each part relative to all the others
- Orthographic views of each of the parts of the pulley jack assembly

Instructions:

- Answer this question on page 6.
- Draw, to scale 1 : 1 and in third-angle orthographic projection, the following views of the assembled parts of the pulley jack assembly:
  - **4.1 A sectional front view** on cutting plane A-A, as seen from the direction of the arrow shown on the exploded isometric drawing. The cutting plane is shown on the right view of the base (part 1).
  - **4.2 The right view.** Show **only the left half** of the right view by applying the convention for the presentation of a symmetrical object.

NOTE:

- Planning is essential.
- Apply the convention of symmetry on the right view only.
- ALL drawings must comply with the guidelines as contained in the *SANS 10111*.
- The bearing (part 3) must be drawn in convention in the front view.
- The bearing (part 3) must be drawn in detail, showing only TWO balls, in the right view.
- The shaft (part 2) must be drawn in its lowest position so that point S will be at the indicated position.
- Show THREE faces of the M24 nut in the front view.
- Add cutting plane A-A.
- NO hidden detail is required. **[94]**

PARTS LIST

	PART	QUANTITY	MATERIAL
1	BASE	1	CAST IRON
2	SHAFT	1	MILD STEEL
3	BEARING	1	MILD STEEL
4	ADJUSTING COLLAR	1	MILD STEEL
5	M24 NUT	1	MILD STEEL
6	FORK	1	CAST IRON
7	PULLEY	1	CAST IRON
8	PIN	1	MILD STEEL

JT ENGINEERS
72 PERKINS STREET
NORTH END 6001
www.jteng.co.za
☎ 041 313 1574

PULLEY JACK

ALL DIMENSIONS ARE IN MILLIMETRES

Copyright reserved

STAPLE

FOR OFFICIAL USE ONLY	
INCORRECT ORTHOGRAPHIC PROJECTION	
INCORRECT OVERALL SCALE	
INCORRECT HATCHING	
PARTS NOT ASSEMBLED	
TOTAL PENALTIES (-)	

ASSESSMENT CRITERIA					
SECTIONAL FRONT VIEW					
		POSSIBLE	OBTAINED	SIGN	MODERATED
1	BASE	13			
2	SHAFT	$8\frac{1}{2}$			
3	BEARING	6			
4	ADJUSTING COLLAR	$6\frac{1}{2}$			
5	M24 NUT	6			
6	FORK	$9\frac{1}{2}$			
7	PULLEY	$8\frac{1}{2}$			
8	PIN	1			
SUBTOTAL		**59**			
RIGHT VIEW					
1	BASE	5			
2	BEARING	5			
3	ADJUSTING COLLAR	$1\frac{1}{2}$			
4	M24 NUT	$2\frac{1}{2}$			
5	FORK	3			
6	PULLEY	1			
SUBTOTAL		**18**			
GENERAL					
1	CENTRE LINES	4			
2	ASSEMBLY	7			
3	CONVENTION	3			
4	CUTTING PLANE	3			
SUBTOTAL		**17**			
TOTAL		**94**			
PENALTIES(-)					
GRAND TOTAL					

EXAMINATION NUMBER

EXAMINATION NUMBER

Copyright reserved

BASIC-EDUCATION