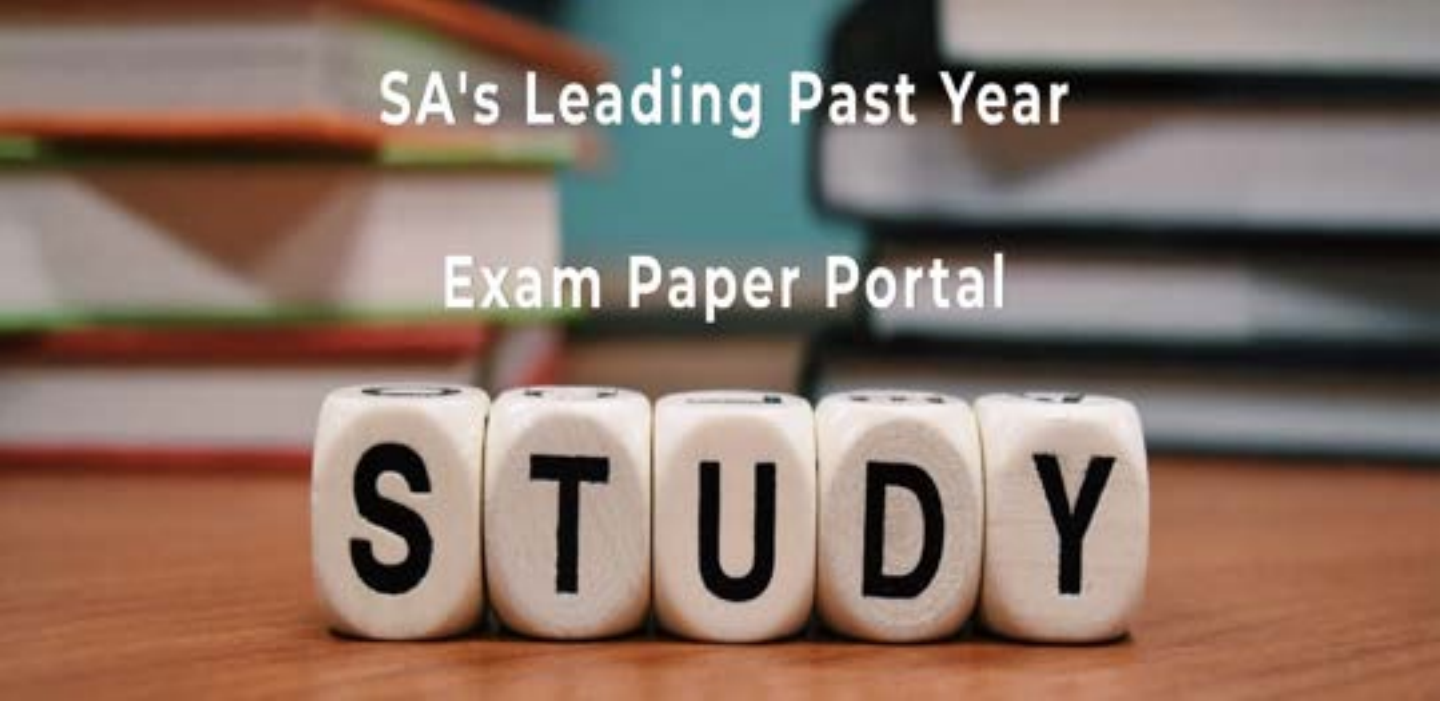

basic education

Department:
Basic Education
REPUBLIC OF SOUTH AFRICA

NATIONAL SENIOR CERTIFICATE

GRADE 12

TECHNICAL MATHEMATICS P2

NOVEMBER 2018

MARKS: 150

TIME: 3 hours

This question paper consists of 14 pages and an information sheet consisting of 2 pages.

INSTRUCTIONS AND INFORMATION

Read the following instructions carefully before answering the questions.

1. This question paper consists of 11 questions.
2. Answer ALL the questions in the SPECIAL ANSWER BOOK provided.
3. Clearly show ALL calculations, diagrams, graphs, etc. that you used to determine your answers.
4. Answers only will NOT necessarily be awarded full marks.
5. If necessary, round off answers to TWO decimal places, unless stated otherwise
6. Diagrams are NOT necessarily drawn to scale.
7. You may use an approved scientific calculator (non-programmable and non-graphical), unless stated otherwise.
8. An information sheet with formulae is included at the end of the question paper.
9. Write neatly and legibly.

QUESTION 1

The picture alongside shows a roof truss design.

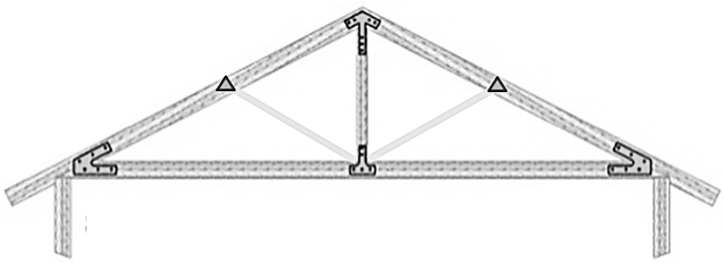

The diagram below, NOT drawn to scale, models the above roof truss design in a Cartesian plane. $A(5;4)$, $B(10;0)$ and $O(0;0)$ are the vertices of ΔABO. Points E and D are midpoints of OA and AB respectively. $AC \perp OB$ with C on OB. The angle of inclination formed by the positive x-axis and CD is θ.

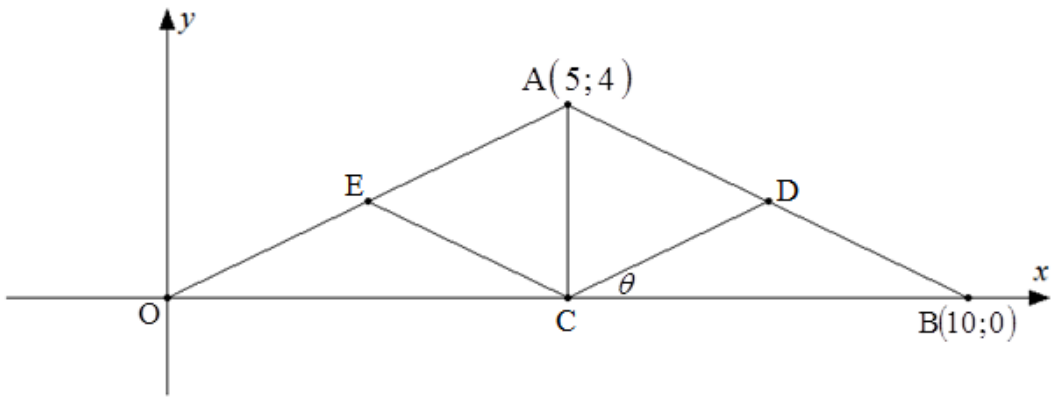

Determine:

1.1 The length of AB (Round off to ONE decimal place.) (3)

1.2 The coordinates of D (2)

1.3 The gradient of CD (3)

1.4 The size of θ (Round off to the nearest degree.) (2)

1.5 The equation of line OA (3)

[13]

QUESTION 2

2.1 In the diagram below, O(0 ; 0) is the centre of the circle with equation $x^2 + y^2 = 5$ Straight line KL with equation $y - 2x + 5 = 0$ is a tangent to the circle at point L(t ; – 1). LO is produced to $M\left(-3\,;1\tfrac{1}{2}\right)$. K is the y-intercept of straight lines MK and LK.

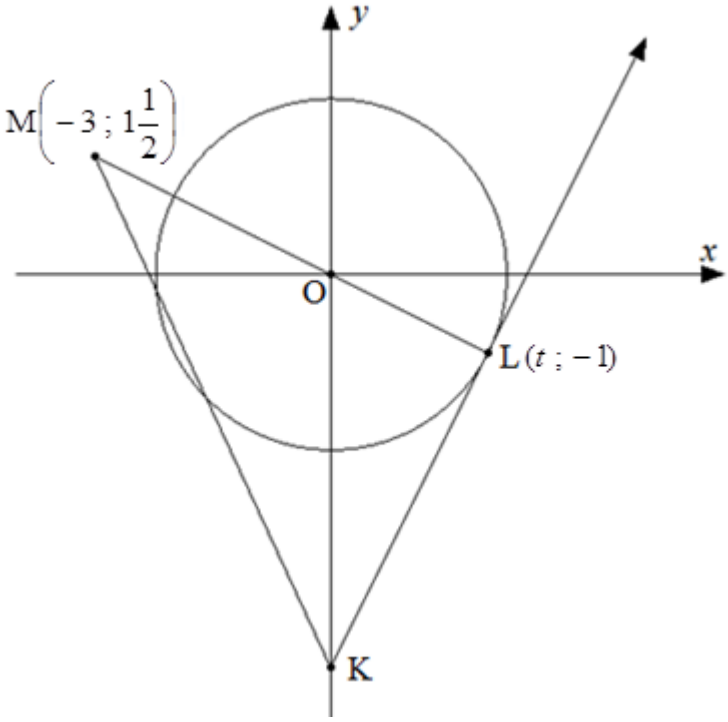

Determine:

2.1.1 The numerical value of t (2)

2.1.2 The coordinates of K (2)

2.1.3 The equation of the straight line that is parallel to KL and also passes through M. Give the equation in the form $y = ...$ (3)

2.1.4 Analytically that ΔKLM is right-angled. Give a reason for your answer. (3)

2.2 Draw, on the grid provided, the graph defined by:

$$\frac{x^2}{9} + \frac{y^2}{25} = 1$$

Clearly show ALL the intercepts with the axes. (3)

[13]

QUESTION 3

3.1 In the diagram below, T(– 6 ; p) is a point in the Cartesian plane.
OT = 10 units and the angle that is formed by OT with the positive x-axis is θ.

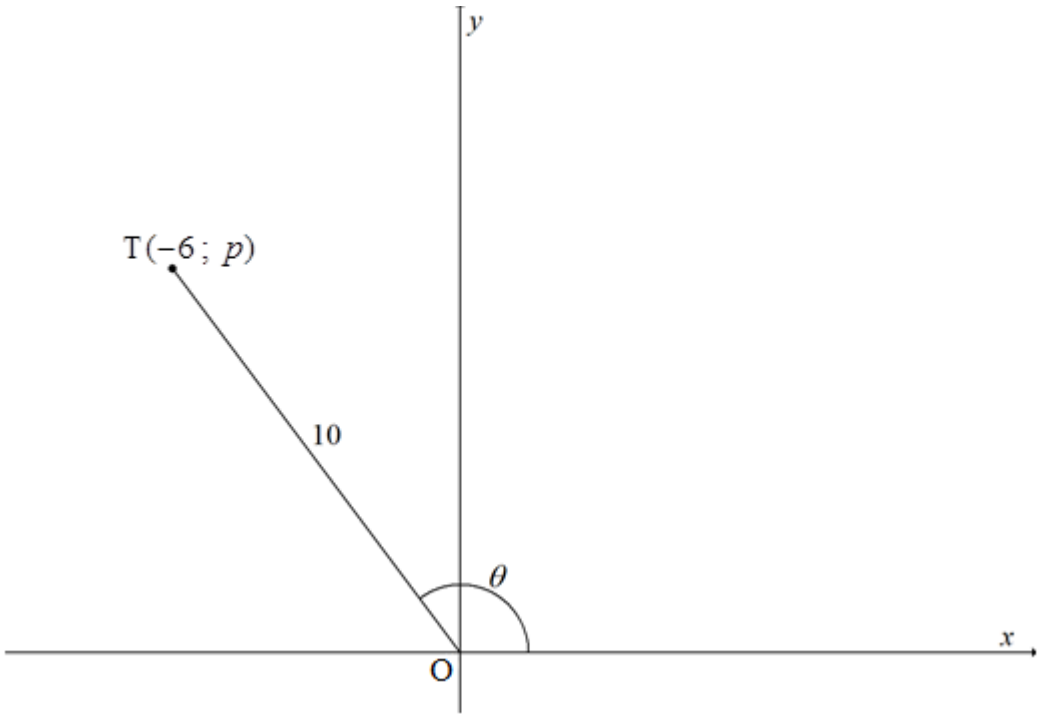

Determine, without using a calculator, the numerical value of:

3.1.1 p (2)

3.1.2 $\cos\theta$ (1)

3.1.3 $\text{cosec}^2\theta - 4\tan\theta$ (4)

3.2 If $\hat{P} = 78,5°$ and $\hat{Q} = 86°$, calculate the numerical value of the following (round off to TWO decimal places):

$$\frac{1}{\sec^2(Q + P)}$$ (3)

3.3 Given: $\sin\beta = -0,752$ for $\beta \in [0°; 360°]$

3.3.1 State in which quadrant angle β lies. (2)

3.3.2 Hence, or otherwise, determine the size of angle β. (3)

[15]

QUESTION 4

4.1 Simplify the following to a single trigonometric ratio:

$$\frac{\sec x \cdot \cos(360° - x) - \tan^2(180° + x) \cdot \cos^2 x}{\sin^2 x}$$ (7)

4.2 Complete the following identity: $\text{cosec}^2 2x - \cot^2 2x = \ldots$ (1)

4.3 Simplify the following:

$$\sin^2 A \cdot \cot^2 A - \cos^2 A \cdot \cos \pi$$ (4)

[12]

QUESTION 5

Given: $f(x) = \tan x$ and $g(x) = \sin 2x$ for $x \in [0°; 180°]$

5.1 Draw a sketch graph of f and g on the same set of axes on the grid provided. Clearly indicate ALL turning points, end points and intercepts with the axes. (6)

5.2 Write down the range of g. (1)

5.3 Give the period of f. (1)

5.4 Determine the values of x for which $g(x) \geq f(x)$ for $x \in [0° ; 180°]$ (4)

[12]

QUESTION 6

The diagram below shows two vertical poles AD and BC. Point E lies on the same horizontal plane as bases D and C of poles AD and BC such that DE = EC = 8 m. The angle of elevation of B from A is $22,5°$.

$B\hat{E}C = 75°$
AD = 25 m
BC = 30 m

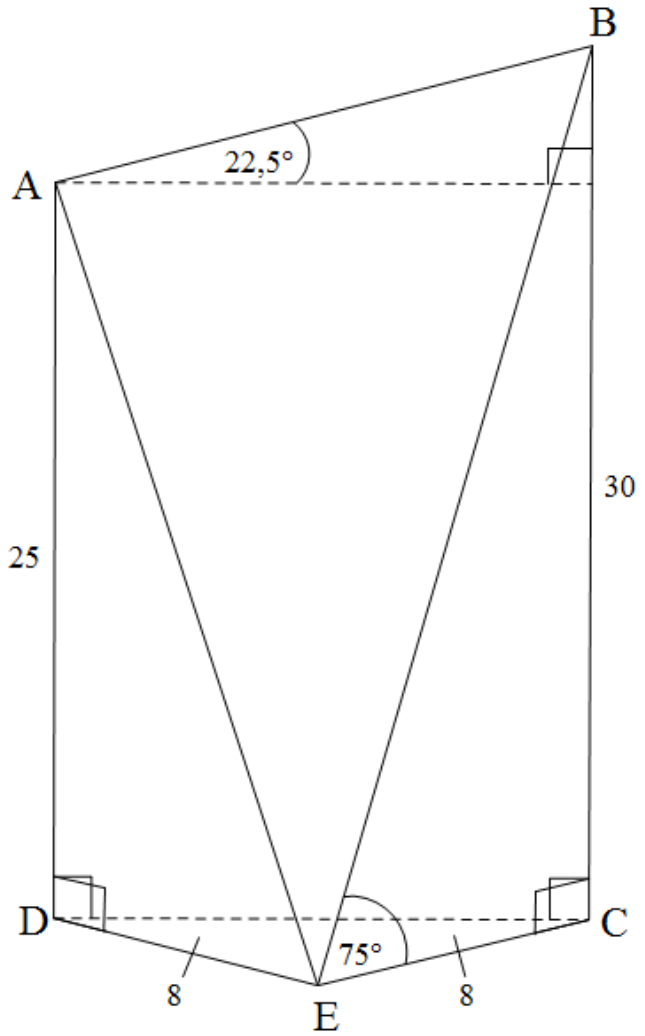

6.1 Show that the length of $AB \approx 13$ m. (3)

6.2 Determine, to the nearest metre, the length of BE. (2)

6.3 Determine, to the nearest degree, the size of $A\hat{E}B$ if $AE = \sqrt{689}$ m. (4)

[9]

QUESTION 7

7.1 Complete the following theorem:

The tangent of a circle is … the radius of the circle at the point of contact. (1)

7.2 The diagram below shows a circle with centre O.

AB and AC are tangents to the circle with $OC \perp AC$, $AB \perp OB$ and $\hat{A} = 50°$.

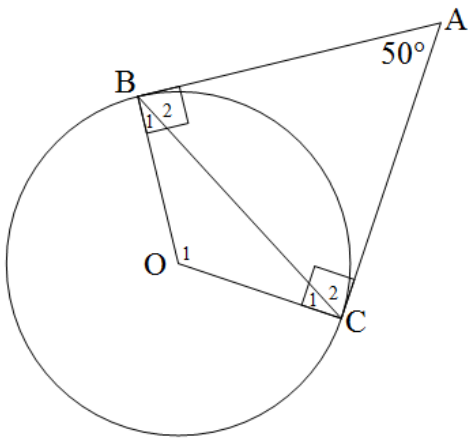

7.2.1 Give a reason why AB = AC (1)

7.2.2 Determine the size of $\hat{C}_2$. (2)

7.2.3 What special type of quadrilateral is ABOC? (1)

7.2.4 Determine, stating a reason, the size of $\hat{O}_1$. (2)

7.3 The diagram below shows circle ABCD. Chords BC and AD produced meet at E.

$\hat{A}_2 = 23°$

$\hat{C}_1 = 53°$

$\hat{C}_3 = 56°$

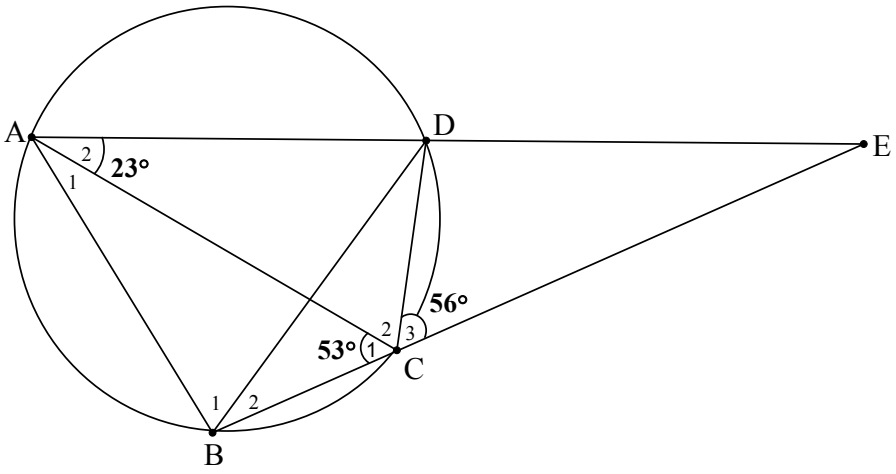

Determine, stating reasons, the sizes of the following angles:

7.3.1 $\hat{A}_1$ (2)

7.3.2 $\hat{B}_2$ (2)

7.3.3 $\hat{B}_1$ (3)

7.3.4 $A\hat{D}C$ (2)
[16]

QUESTION 8

8.1 Complete the following theorem:

The angle subtended by an arc at the centre of a circle is … the size of the angle subtended by the same arc at the circle (on the same side of the arc as the centre). (1)

8.2 In the diagram below, O is the centre of circle PMST.
RS is a tangent at S.

$\hat{S}_1 = 56°$

$\hat{O}_1 = 104°$

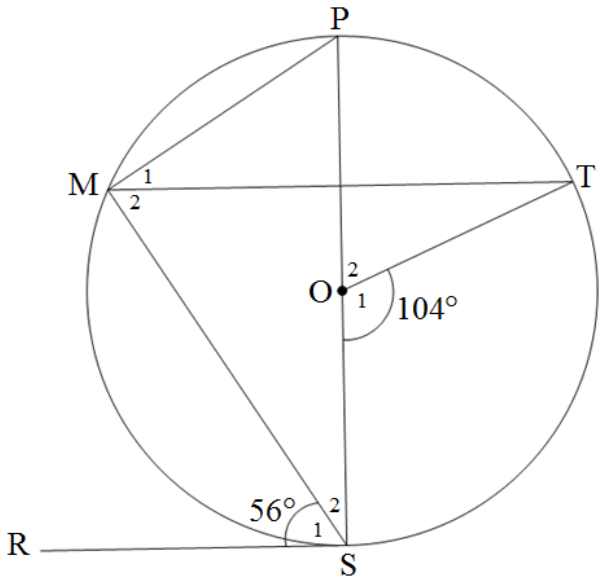

8.2.1 Determine, stating reasons, the sizes of the following angles:

(a) $\hat{S}_2$ (2)

(b) $P\hat{M}S$ (2)

(c) $\hat{P}$ (2)

(d) $\hat{M}_1$ (3)

8.2.2 Show, stating reasons, why MPTO is NOT a cyclic quadrilateral. (3)
[13]

QUESTION 9

9.1 Complete the following theorem:

If two triangles are equiangular, then the … are in proportion (and consequently the triangles are similar). (1)

9.2 In the diagram below, ΔKLM is drawn. C and Q are points on KM. B and P are points on KL.
BC || PQ || LM and BQ || PM.
KM = 15 units
PL = 4 units
KQ : QM = 3 : 2

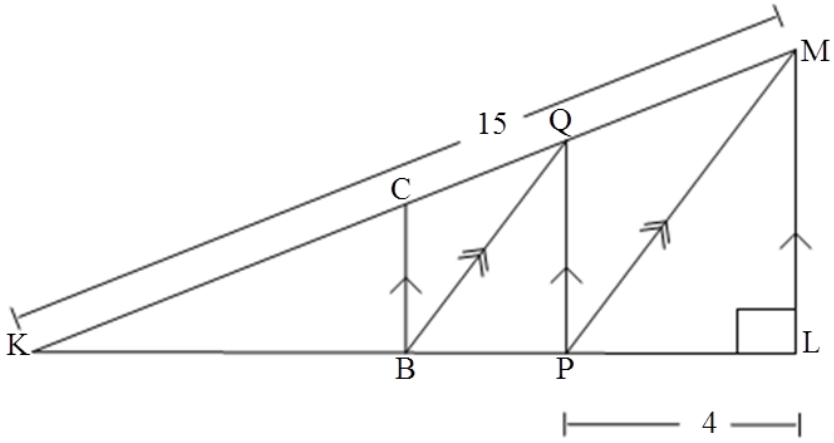

9.2.1 Determine, stating reasons, the lengths of the following:

(a) QM (2)

(b) KP (3)

(c) KB (3)

9.2.2 (a) Give TWO reasons why $\Delta KBQ \parallel\parallel \Delta KPM$. (2)

(b) Hence, or otherwise, determine the length of BQ if $PM = \sqrt{141}$ units. Leave your answer in simplified surd form. (3)

[14]

QUESTION 10

10.1 A wind pump, used to extract underground water, has blades that are combined to form a circular shape. The diameter, D, of the circular shape is 2 m. The pictures and diagram below model the above situation.

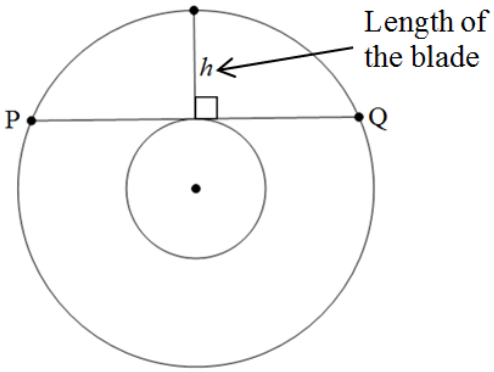

Determine:

10.1.1 The circumferential velocity (in metres per second) of the rotating blades if the blades rotate at 165 revolutions per minute (4)

10.1.2 The length of the blade (height of segment) if the length of chord PQ is 1,8 m. (Round off to ONE decimal place.) (4)

10.2 The picture and diagram below show one of the mechanisms of a machine where three pulleys with centres G, H and K are connected by a belt. AB, CD and EF are tangents to the circles at points A, B, C, D, E and F.

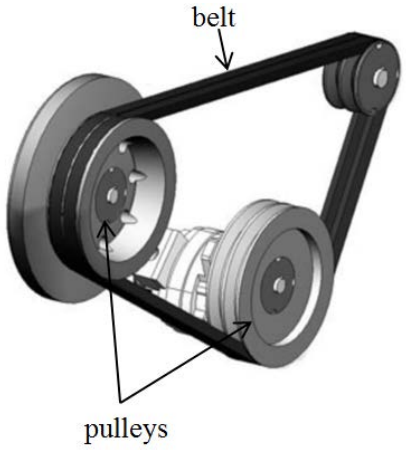

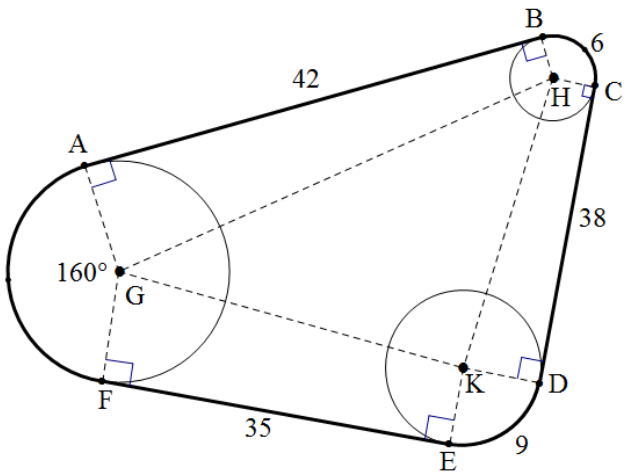

AB = 42 cm, CD = 38 cm and EF = 35 cm. Furthermore, $A\hat{G}F = 160^{\circ}$ and the lengths of arcs BC and DE are 6 cm and 9 cm respectively.

10.2.1 What special type of quadrilateral is KGFE ? (1)

10.2.2 (a) Determine the length of FG, the radius of the bigger pulley, if the distance from E to G is 35,4 cm. (Round off to ONE decimal place.) (2)

(b) Convert 160° to radians. (Round off to ONE decimal place.) (2)

(c) Calculate the total length of the belt. (Round off to the nearest centimetre.) (4)

[17]

QUESTION 11

11.1 The irregular figure below has one straight side, 24 cm long, which is divided into 4 equal parts. The ordinates dividing the parts are:

12 cm ; 10,2 cm ; 9,3 cm ; 8,5 cm and p. The length of p is half the length of the first ordinate.

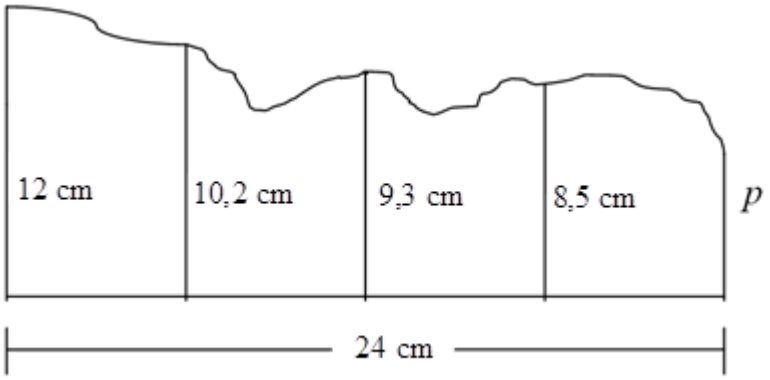

11.1.1 Write down the value of p. (1)

11.1.2 Hence, determine the area of the irregular figure by using the mid-ordinate rule. (4)

11.2 A solid hollowed shape was constructed from a cylindrical rod with a conical section (shaded) removed, as shown in the figure below. The diameter of both the cylinder and the cone is 10 cm. The height of the cylinder is 15 cm, the height of the cone is 12 cm and the slant height of the cone is 13 cm.

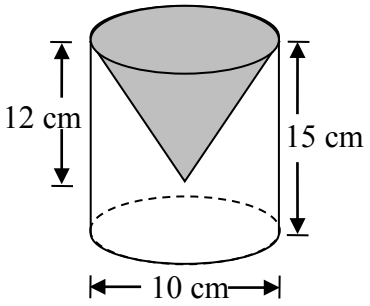

Curved surface area of cone $= \pi r s$
where s is slant height

Total surface area of a cylinder $= 2\pi r^2 + 2\pi r h$

Volume of a cone $= \frac{1}{3}\pi r^2 h$

Volume of a cylinder $= \pi r^2 h$

11.2.1 Calculate the total surface area of the hollowed shape. (6)

11.2.2 Determine whether the volume of the hallowed shape is more than $280\pi\,\text{cm}^3$. (5)

[16]

TOTAL: 150

INFORMATION SHEET: TECHNICAL MATHEMATICS

$x = \dfrac{-b \pm \sqrt{b^2 - 4ac}}{2a}$ $\quad x = -\dfrac{b}{2a}$ $\quad y = \dfrac{4ac - b^2}{4a}$

$a^x = b \Leftrightarrow x = \log_a b$, $\quad a > 0$, $a \neq 1$ and $b > 0$

$A = P(1 + ni)$ $\quad A = P(1 - ni)$ $\quad A = P(1 - i)^n$ $\quad A = P(1 + i)^n$

$i_{eff} = \left(1 + \dfrac{i}{m}\right)^m - 1$

$f^{/}(x) = \lim\limits_{h \to 0} \dfrac{f(x+h) - f(x)}{h}$

$\int x^n dx = \dfrac{x^{n+1}}{n+1} + C \quad , \quad n \neq -1$

$\int \frac{1}{x} dx = \ln x + C, \quad x > 0$ $\quad \int a^x dx = \dfrac{a^x}{\ln a} + C \quad , \quad a > 0$

$d = \sqrt{(x_2 - x_1)^2 + (y_2 - y_1)^2}$ $\quad \mathrm{M}\left(\dfrac{x_1 + x_2}{2} ; \dfrac{y_1 + y_2}{2}\right)$

$y = mx + c$ $\quad y - y_1 = m(x - x_1)$ $\quad m = \dfrac{y_2 - y_1}{x_2 - x_1}$ $\quad m = \tan\theta$

$\dfrac{x^2}{a^2} + \dfrac{y^2}{b^2} = 1$

In ΔABC: $\dfrac{a}{\sin A} = \dfrac{b}{\sin B} = \dfrac{c}{\sin C}$ $\quad a^2 = b^2 + c^2 - 2bc \cdot \cos A$

$area\ of\ \Delta ABC = \frac{1}{2} ab \cdot \sin C$

$\sin^2\theta + \cos^2\theta = 1$ $\quad 1 + \tan^2\theta = \sec^2\theta$ $\quad \cot^2\theta + 1 = \mathrm{cosec}^2\theta$

$\pi rad = 180°$

Angular velocity $= \omega = 2\pi n = 360° n$ where n = rotation frequency

Circumferencial velocity $= v = \pi D n$ where D = diameter and n = rotation frequency

$s = r\theta$ where r = radius and θ = central angle in radians

Area of a sector $= \frac{rs}{2} = \frac{r^2\theta}{2}$ where r = radius, s = arc length and θ = central angle in radians

$4h^2 - 4dh + x^2 = 0$ where h = height of segment, d = diameter of circle and x = length of chord

$A_T = a\left(m_1 + m_2 + m_3 + \ldots + m_n\right)$ where a = equal parts, $m_1 = \frac{o_1 + o_2}{2}$ and n = number of ordinates

OR

$A_T = a\left(\frac{o_1 + o_n}{2} + o_2 + o_3 + o_4 + \ldots + o_{n-1}\right)$ where a = equal parts, $o_i = i^{th}$ ordinate and n = number of ordinates