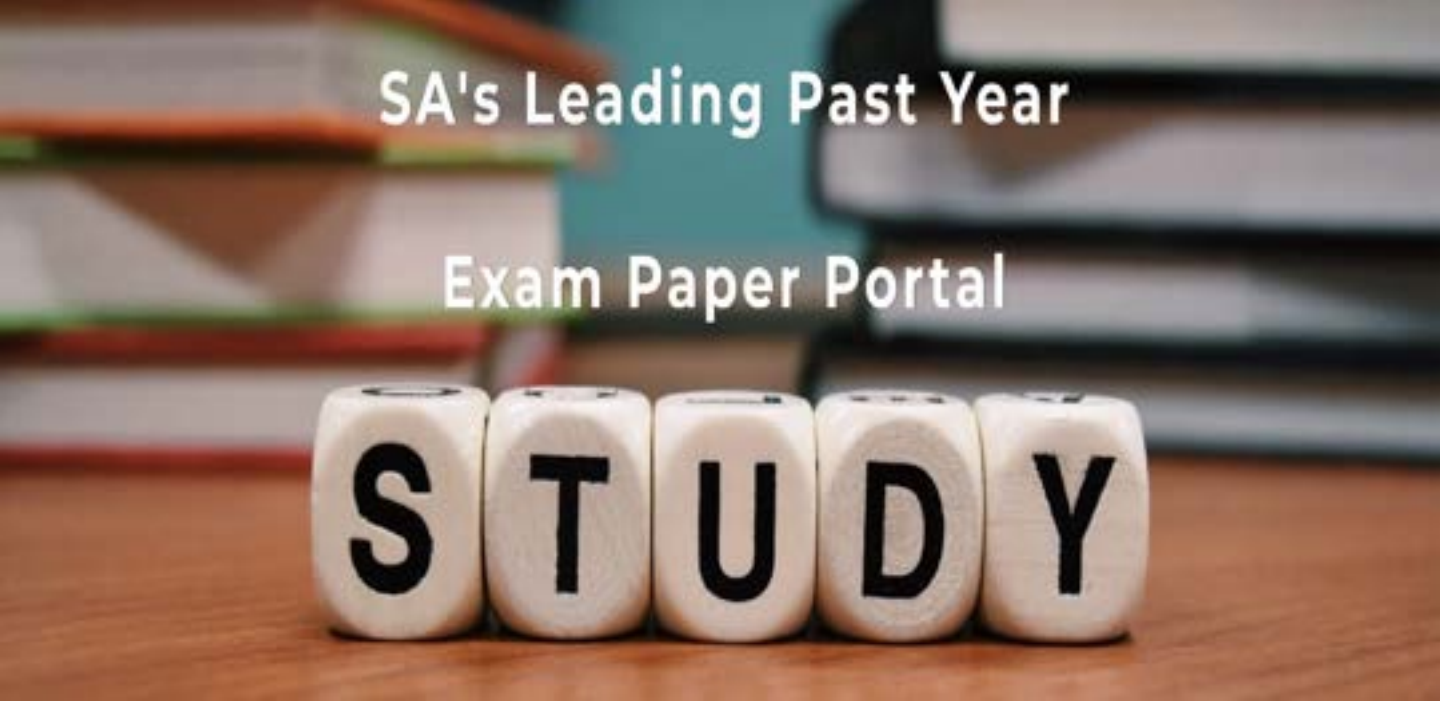

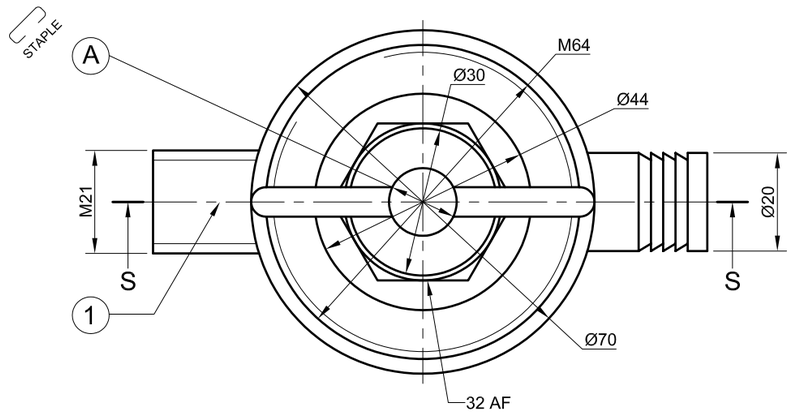

VIEW 2

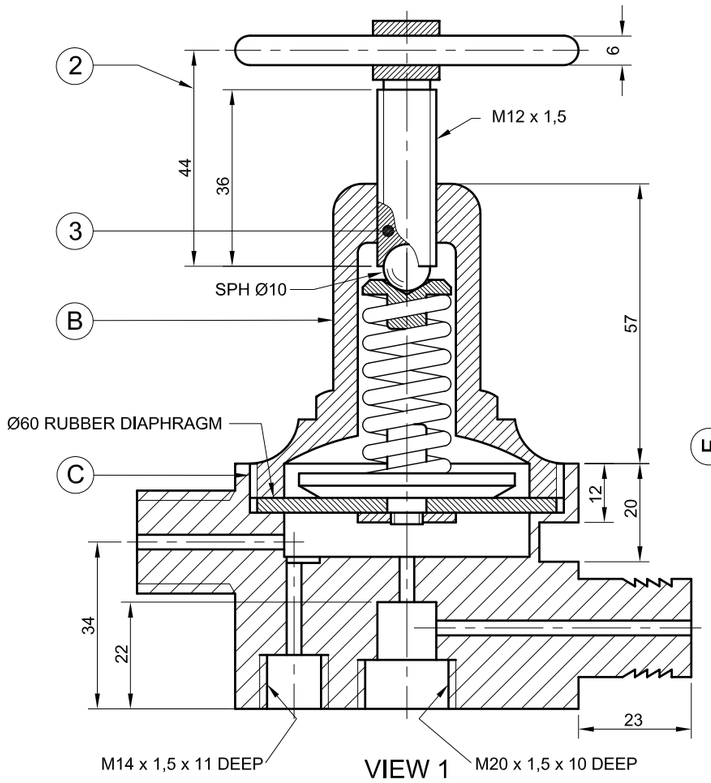

VIEW 1

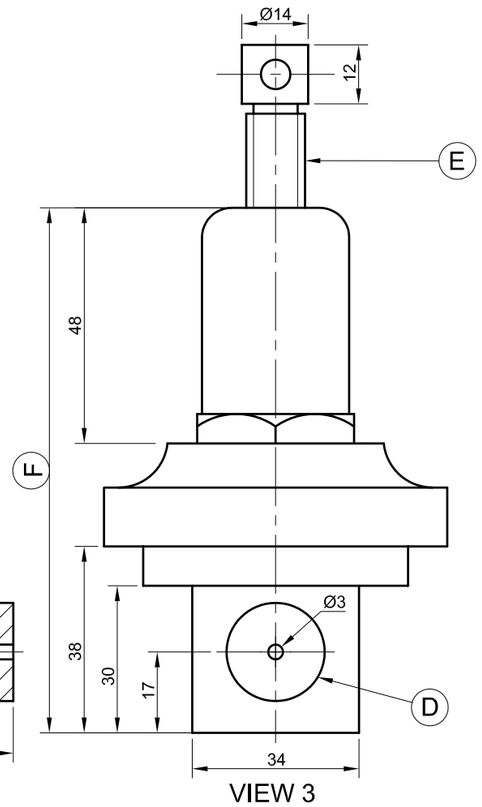

VIEW 3

QUESTION 1: ANALYTICAL (MECHANICAL)

Given:
The working drawings of a diaphragm regulator with a title block and a table of questions.

Instructions:
Complete the table below by neatly printing the answers to the questions, which all refer to the accompanying drawings and the title block. **[30]**

	QUESTIONS	ANSWERS	
1	On what date was the revision completed?		1
2	Who checked the drawing?		1
3	What is the title of the drawing?		1
4	What scale is indicated for the drawing?		1
5	From what material are the metal components of the regulator made?		1
6	How many internal screw threads are there in the assembly?		1
7	How many parts make up the assembly?		1
8	What orthographic projection system has been used?		1
9	What would VIEW 3 be called?		1
10	What would VIEW 2 be called?		1
11	What is the outer diameter of the rubber diaphragm?		1
12	What is the diameter of the sphere?		1
13	Determine the dimensions at: A B C D E F		6
14	What drawing feature is shown at 1?		1
15	What drawing feature is shown at 2?		1
16	What type of section is shown at 3?		1
17	What does the machining symbol ✓ mean?		2
18	In the block below, draw, in neat freehand, the simplified *SABS 0111* convention for a spring.		4
19	What is the permissible tolerance on the components of the regulator?		1
20	Determine the upper limit of tolerance for a dimension of 34 mm.		2
	TOTAL		**30**

DATE	CHANGED BY	REVISION DESCRIPTION	№
12/05/09	MARIE	DIAMETER OF INLETS	A

DIAPHRAGM REGULATOR

EGD ENGINEERING (SA) (PTY) LTD
188 SCHOEMAN STREET
PRETORIA
0001
www.egdengineering.co.za
☎ 012 555 2345

DRAWING SYSTEM: AutoCAD 2009	DRAWN: MANDLA	20/03/09
DRAWING №. LFN/304/2009	CHECKED: CARLA	29/03/09
FILE NAME: D5-Y2	APPROVED: ROELF	03/04/09
UNLESS OTHERWISE SPECIFIED ALL DIMENSIONS ARE IN MILLIMETRES WITH A TOLERANCE OF 0,25.	MATERIAL: BRASS	
	HEAT TREATMENT: NORMALISE	
UNLESS OTHERWISE SPECIFIED, ALL SURFACE TEXTURE FINISHES ARE ✓	SCALE: 1:2	

18.

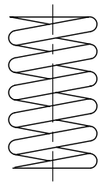

Convention for the spring

EXAMINATION NUMBER	
EXAMINATION NUMBER	2

STAPLE

O

QUESTION 2: LOCI (MECHANISMS)

Given:
A mechanism consisting of a crank OP that is pin-joined to a slotted link AB. The slotted link AB slides over a fixed pin R that is located on the circumference of a wheel, centre Q.
FIGURE 1: A detailed drawing of the mechanism
FIGURE 2: A schematic drawing of the mechanism

Motion:
Crank OP rotates in an anti-clockwise direction while the wheel, centre Q, rotates at the same speed in a clockwise direction. The slotted link AB slides over pin R during the rotation.

Instructions:
2.1 Draw, to scale 1:1, the given schematic drawing using point O as a reference point. Include ALL the labels.
2.2 Trace the locus generated by point A of the slotted link for one revolution.
2.3 Trace the locus generated by point B of the slotted link for one revolution.

- Show ALL necessary construction. **[33]**

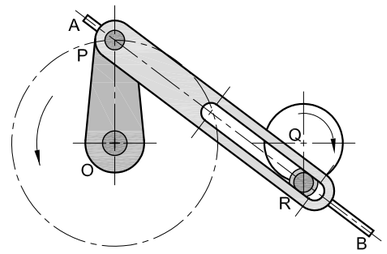

FIGURE 1

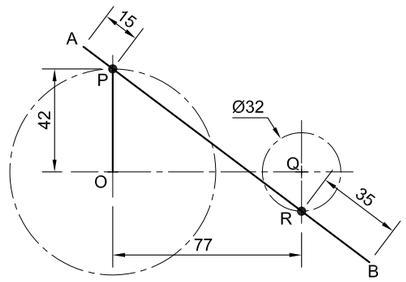

FIGURE 2

ASSESSMENT CRITERIA				
GIVEN + LABELS	5			
CONSTRUCTION	8			
LOCUS A + CURVE	10			
LOCUS B + CURVE	10			
TOTAL	**33**			

EXAMINATION NUMBER

EXAMINATION NUMBER 3

STAPLE

QUESTION 3: ISOMETRIC DRAWING

Given:
The front view, top view and right view of a jig bracket with a cutting plane A-A.
The position of point B on the drawing sheet.

Instructions:
Convert the orthographic views of the jig bracket into a sectional isometric drawing on cutting plane A-A.

- Make corner B the lowest point of the drawing.
- Show ALL necessary construction.
- NO hidden detail is required. **[44]**

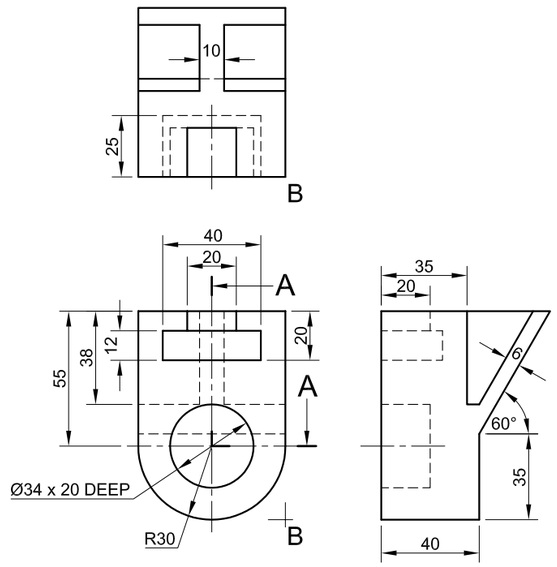

B

ASSESSMENT CRITERIA				
CONSTR' + AUX + B	8			
ISO' CIRCLES + CNTR LINES	8½			
ISO' + NON-ISO' LINES	12			
SECTIONED SURFACES	10½			
HATCHING	5			
TOTAL	**44**			
EXAMINATION NUMBER				
EXAMINATION NUMBER				4

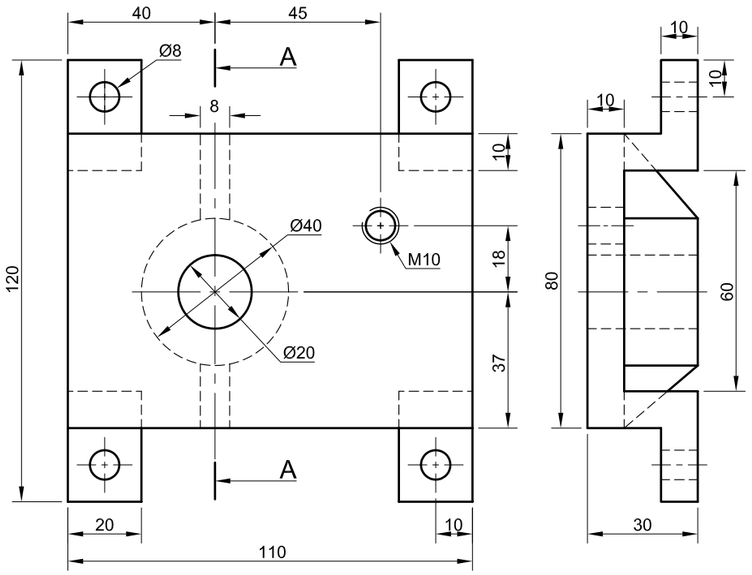

BASE [2]

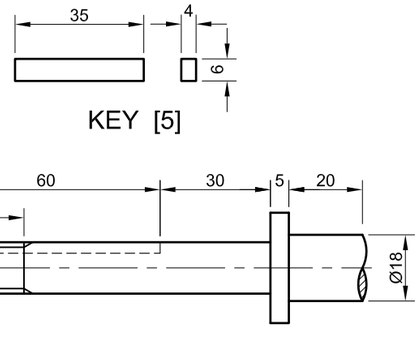

KEY [5]

SHAFT [1]

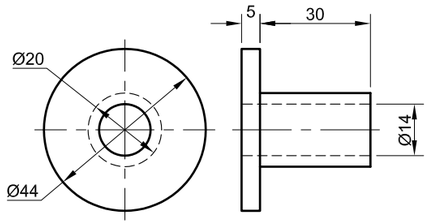

BUSH [3]

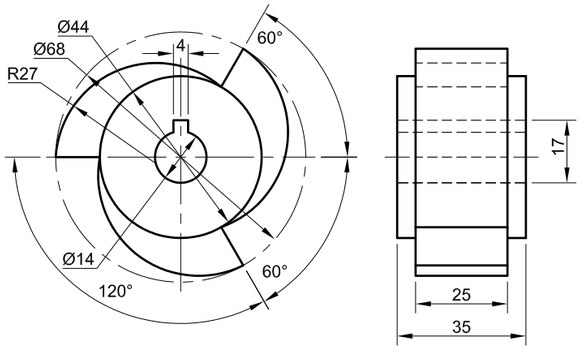

RATCHET [4]

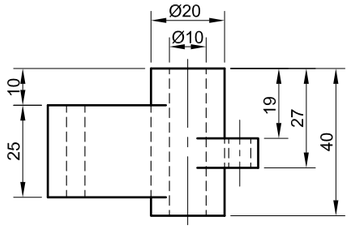

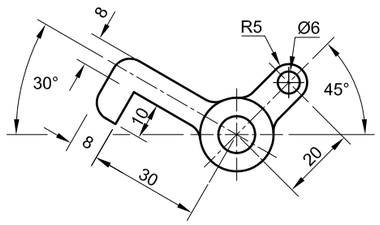

RATCHET ARM [9]

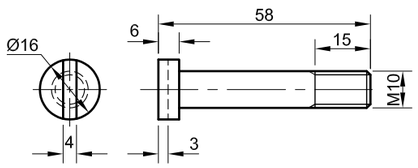

SCREW [8]

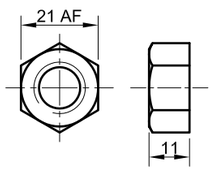

M14 NUT [7]

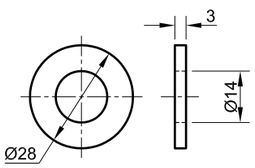

WASHER [6]

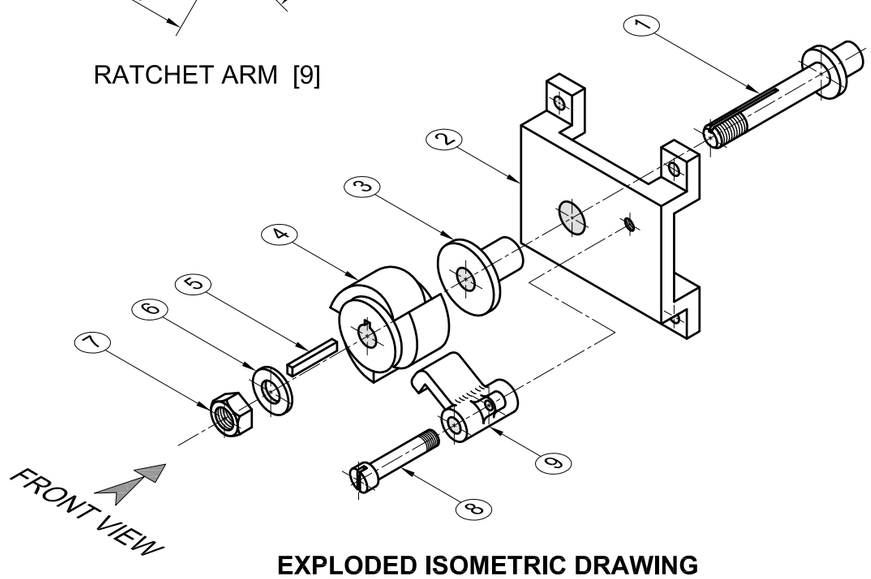

EXPLODED ISOMETRIC DRAWING

QUESTION 4: ASSEMBLY DRAWING

Given:
The exploded isometric drawing of the parts of a ratchet and base, showing the position of each part relative to all the others.

Orthographic views of each of the parts of the ratchet and base.

Instructions:
Answer this question on page 6.
Draw, to scale 1:1 and in third-angle orthographic projection, the following views of the assembled parts of the ratchet and base:

4.1 The front view as seen from the direction of the arrow indicated in the exploded isometric drawing. NO hidden detail is required.

4.2 A sectional right view on cutting plane A-A. The vertical cutting plane passes through the centre line of the assembly, as shown on the front view of the base.

- ALL drawings must comply with the guidelines contained in the *SABS 0111.*

Add the following feature to the drawing:
- The cutting plane A-A

Note:
- Show THREE faces of the M14 nut and ALL necessary construction. **[93]**

PARTS LIST

PART	QUANTITY	MATERIAL
1. SHAFT	1	MILD STEEL
2. BASE	1	MILD STEEL
3. BUSH	1	BRASS
4. RATCHET	1	CAST IRON
5. KEY	1	MILD STEEL
6. WASHER	1	SPRING STEEL
7. M14 NUT	1	MILD STEEL
8. SCREW	1	MILD STEEL
9. RATCHET ARM	1	CAST IRON

EGD ENGINEERING (SA) (PTY) LTD

188 SCHOEMAN STREET
PRETORIA
0001
www.egdengineering.co.za
☎ 012 555 2345

RATCHET AND BASE

ALL DIMENSIONS ARE IN MILLIMETRES

ALL UNSPECIFIED RADII ARE 5

STAPLE

ASSESSMENT CRITERIA				
SECTIONAL VIEW				
	POSSIBLE	OBTAINED	SIGN	MODERATE
1. BASE	10			
2. SHAFT	11			
3. BUSH	3			
4. RATCHET	6			
5. KEY	1½			
6. WASHER + M14 NUT	6½			
7. HATCHING	10½			
FRONT VIEW				
1. BASE	8			
2. SHAFT	2½			
3. WASHER + M14 NUT	3			
4. RATCHET	3½			
5. RATCHET ARM	7½			
6. PIN	1½			
7. CUTTING PLANE A-A	3			
CENTRE LINES	$15 \times \frac{1}{2} = 7\frac{1}{2}$			
ASSEMBLY	6			
3rd ANGLE	2			
TOTAL	**93**			
EXAMINATION NUMBER				
EXAMINATION NUMBER				6